ELECTRONIC GOLDMINE

G2161 - G2162 - G2163

2161-"On Wisconsin"
2162-"University of Arkansas"
2163-"The Marine Hymn"

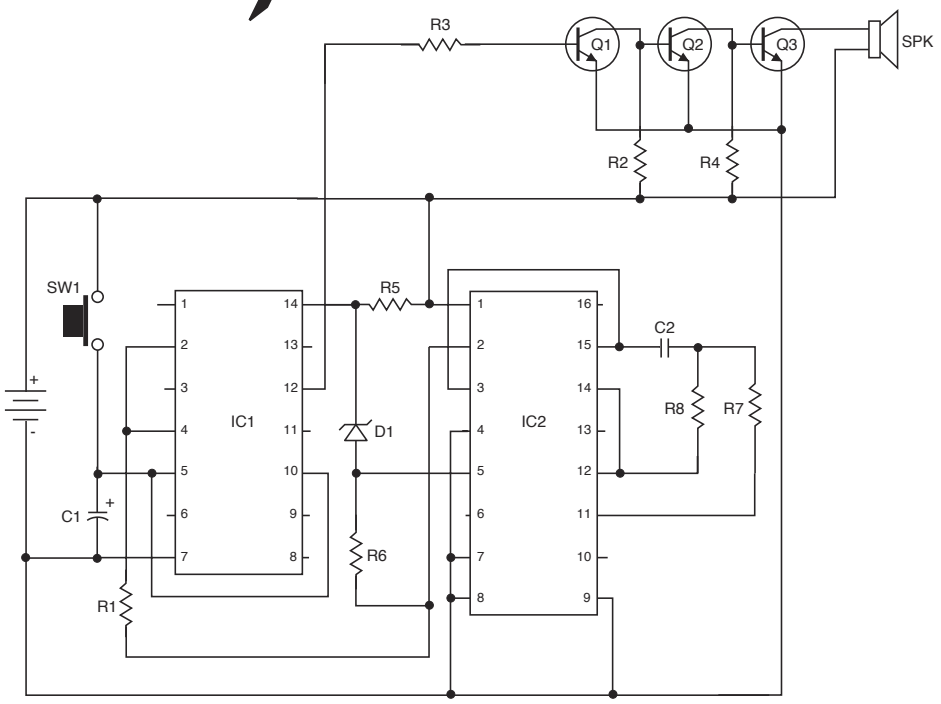

PARTS LIST

C1	_____	330µf Electrolytic Capacitor
C2	_____	100pf Axial Mono (101)
D1	_____	1N753 Zener Diode
IC1	_____	Music IC(G2161, G2162 or G2163
IC2	_____	14049 or 4049 CMOS IC
Q1-Q3	_____	2N3904 NPN Transistor
R1	_____	8.2K Resistor
R2	_____	10K Resistor
R3	_____	100K Resistor
R4	_____	1K Resistor
R5	_____	510Ω Resistor
R6	_____	20K Resistor
R7	_____	1Meg Resistor
R8	_____	33K Resistor
SPK	_____	Small Mylar Cone Speaker
SW1	_____	N.O. Pushbutton Switch
Misc.	_____	IC Sockets, 9V Battery Snap and Wire